ITEM	PART NUMBER	DESCRIPTION	QTY
1	89122253	FRAME, FASTENER	1
2	89122255	NUT, RECT; M6X1	1
3	89136106	SCREW, SOHDTXM; M6 X 1 X 25	1

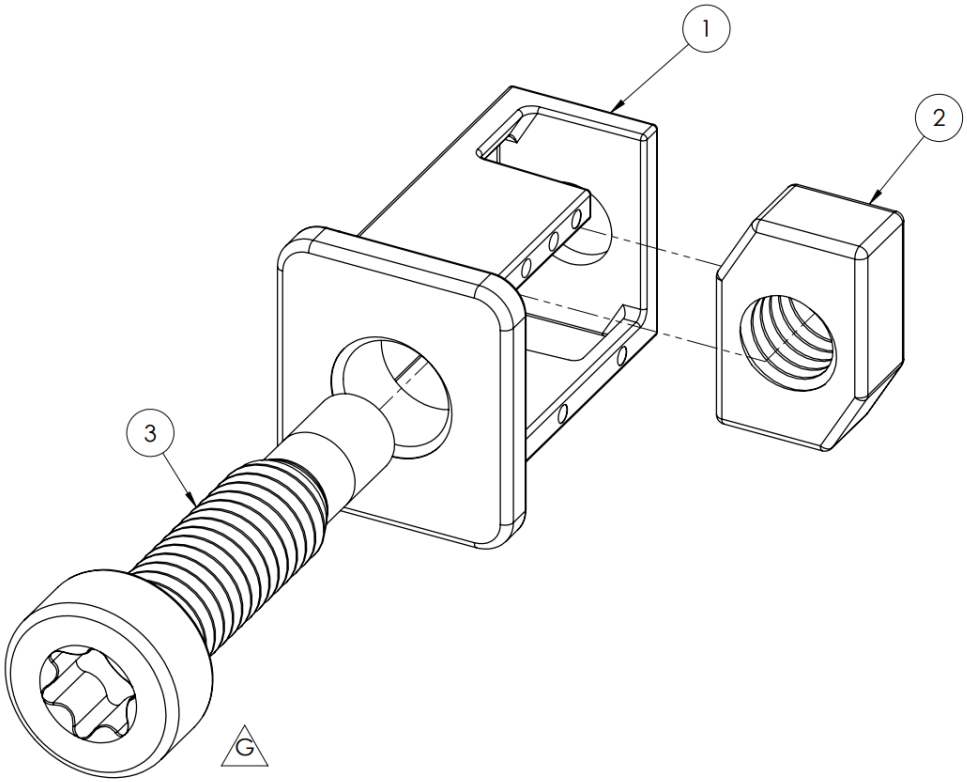

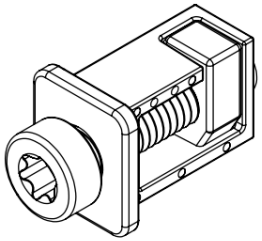

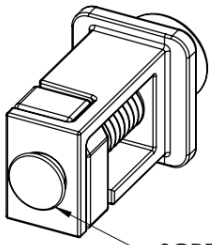

SCREW SECURED BY PEENING, ORBITAL RIVETING OR SWAGING. SCREW MUST TURN FREELY AFTER INSTALLATION.

APPROX. 1.5 EXTENSION TO DISENGAGE NUT THREAD

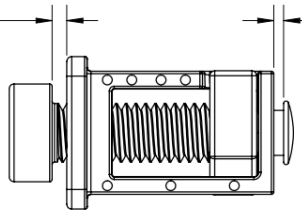

1 CLEARANCE AFTER PEENING/SWAGING

METRIC

PART NO. 89122254	G	ROLL UP MODEL CHANGES TO SCREW	ECO-178774	11/7/16	HDL	---
MATERIAL	REV	DESCRIPTION	ECO/PDP	DATE	BY	ENG
FINISH NONE						

TOLERANCE UNLESS NOTED
ZERO PLACE X ±2.5
ONE PLACE .X ±0.8
TWO PLACE .XX ±0.38
HOLE DIA ±0.13
ANGLES ±2°

SCALE NONE
DRAWN HDL
CHECKED ---
APPROVED ---
DATE 4/22/15

SolidWorks Drawing

THIRD ANGLE PROJECTION

DO NOT SCALE DRAWING

TITLE
ASSY, VARI GRIP RANGE FSTNR

SIZE B

DRAWING NO. 89122254

SHEET 1 OF 1